Current part is item (16) on diagram. Available at www.oshkoshequipment.com

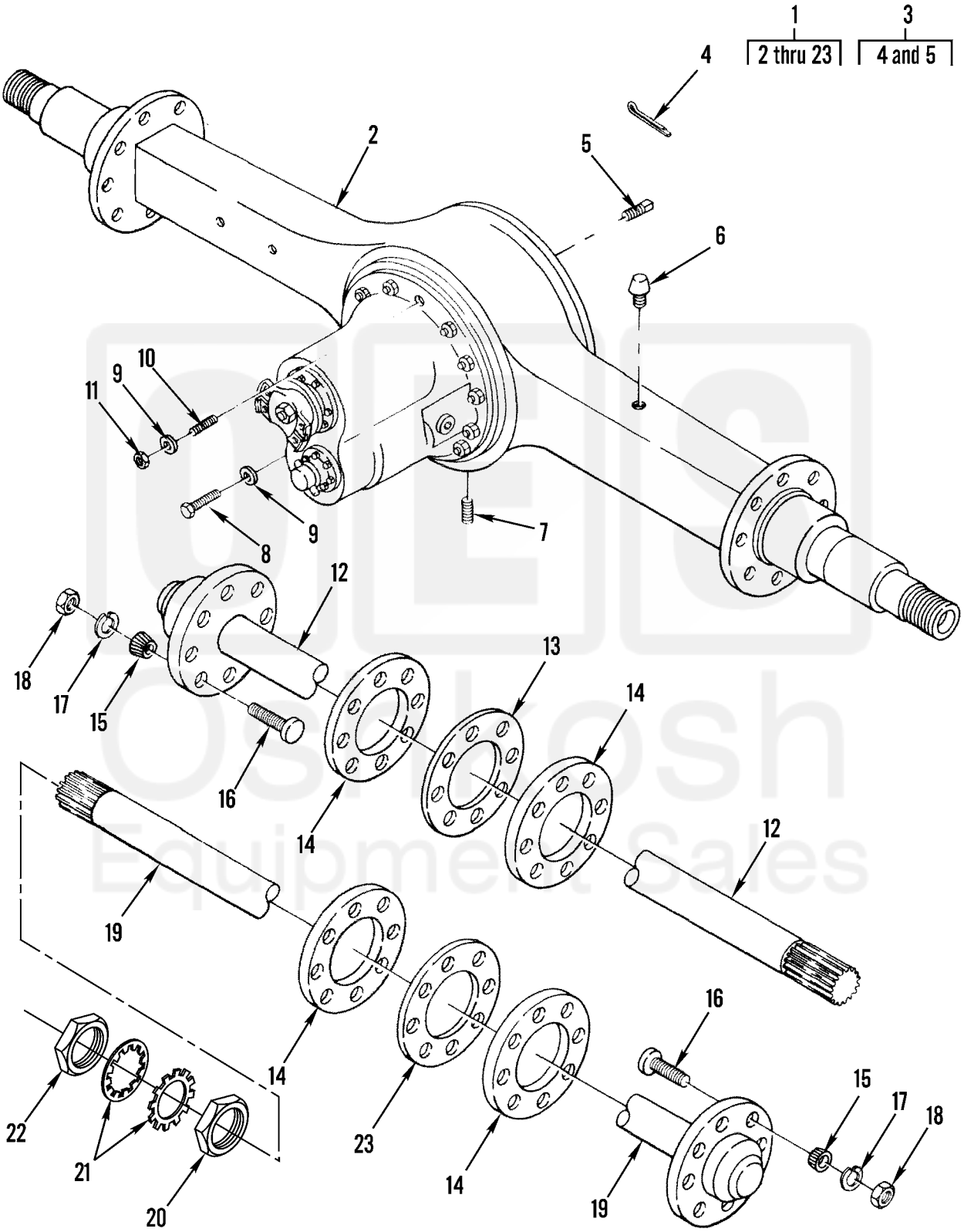

Figure 114. Forward Rear Axle and Rear Rear Axle Assembly

Current part is item (16) on diagram. Available at www.oshkoshequipment.com

Current part is item (16) on diagram. Available at www.oshkoshequipment.com

GROUP 11 REAR AXLE
GROUP 1100 REAR AXLE ASSEMBLY

FIG. 114 FORWARD REAR AXLE AND REAR REAR AXLE ASSEMBLY

(1) ITEM NO	(2) SMR CODE	(3) NSN	(4) CAGEC	(5) PART NUMBER	(6) DESCRIPTION AND USABLE ON CODES(UOC)	(7) QTY
1	PAFHH	2520011623761	3D6E9	QP100QX23	AXLE ASSEMBLY,AUTOM FORWARD-REAR...	1
1	PAFHH	2520015248159	19207	12478870	AXLE ASSEMBLY,AUTOM REAR-REAR AXLE WITH ABS.....	1
2	XAFZZ		78500	C1-3121-B-28-S	.HOUSING ASSEMBLY FORWARD-REAR.....	1
2	XAFZZ		78500	C1-3121-C-29S	.HOUSING ASSEMBLY REAR-REAR.....	1
3	PAOZZ	2530011254083	78500	A-1199-S-1709	.PLUG,ASSEMBLY.....	1
4	PBOZZ	5315008423044	59556	K-500-PC-0001	..PIN,COTTER.....	1
5	PAOZZ	4730001421630	78500	1850-V-48	..PLUG,PIPE.....	1
6	PAOZZ	2520003532286	78500	A1199-P-1394	.BREATHER.....	1
7	PAOZZ	4730005954827	19207	7521743	.PLUG,PIPE,MAGNETIC.....	1
8	PAFZZ	5305011368347	78500	S-21014-1	.SCREW,CAP,HEXAGON H.....	10
9	PAFZZ	5310010830104	19207	12267565	.WASHER,FLAT 5/8".....	14
10	PBFZZ	5307011860747	10988	N8563	.STUD,PLAIN.....	4
11	PAFZZ	5310002762698	78500	N-110-1	.NUT,PLAIN,HEXAGON 5/8".....	4
12	PAFZZ	2520010898468	3D6E9	3202-N-6358	.SHAFT,AXLE,AUTOMOTI REAR-REAR.....	1
12	PAFZZ	2520010895862	78500	3202-L-6356	.SHAFT,AXLE,AUTOMOTI FORWARD-REAR..	1
13	PAFZZ	5330008078123	3D6E9	A1205N612	.SEAL ASSEMBLY,BEARI INNER.....	2
14	PAFZZ	5330005806567	78500	2208X440	.GASKET.....	4
15	PAFZZ	5365004272282	78500	1246-D-290	.BUSHING,TAPERED.....	16
16	PAFZZ	5307011173156	34623	MA309-21041	.STUD.....	16
17	PAFZZ	5310008000695	96906	MS35335-39	.WASHER,LOCK.....	16
18	PAFZZ	5310010590711	78500	NL 110-1	.NUT,HEX.....	16
19	PAFZZ	2520010895862	78500	3202-L-6356	.SHAFT,AXLE,AUTOMOTI REAR-REAR.....	1
19	PAFZZ	2520010898468	3D6E9	3202-N-6358	.SHAFT,AXLE,AUTOMOTI FORWARD-REAR..	1
20	PAFZZ	5310012544255	78500	R002305	.NUT,PLAIN,HEXAGON OUTER 3 1/4-12UN-2B.....	4
21	PAFZZ	5310014814351	3D6E9	1229F4634S	.WASHER,LOCK SET INCLUDES WASHER W/ HOLE AND TANGED WASHER.....	4
22	PAFZZ	2520009177434	78500	R002303	.NUT,WHEEL BEARING INNER 3 1/4-12..	4
23	PAFZZ	5330010762886	3D6E9	A1205U619	.SEAL OIL OUTER OUTER.....	2

END OF FIGURE

Current part is item (16) on diagram. Available at www.oshkoshequipment.com